Item	CHARACTERISTICS	Unit	**EWC-T-D-R-1600-2015**
1	**Manufacturer**		**EWC**
2	**Rated power**	**kVA**	**1600**
3	Rated frequency	Hz	50
4	Rated. MV wind. voltage	kV	11
5	Steps of regulation on the MV side off-load	%	± 2 x 2,5
6	Rated LV wind. Voltage No-load	kV	0,416
7	MV/LV wind. connections		Delta/star+N
8	Vector group		Dyn11
9	Max altitude on the sea level	m	1000
10	Min. ambient temperature	°C	-5
11	Max ambient temperature	°C	50
12	Average yearly ambient temperature	°C	30
13	Type of installation		Indoor
14	Type of cooling		AN / AF
15	Dielectric		Epoxi-resin
16	Construction standards		IEC 60076-11
17	Isolation class of MV windings	kV	12/28/75
18	Isolation class of LV windings	kV	1,1/3
19	Thermal class of isolement		F
20	Average temp rise of HV/MV windings	°C	90
21	Max temp magn. core	°C	90
22	No-load losses to Vn	W	**3300**
23	No-load current to Vn/110% Vn	%	**1.2**
24	Load-losses ref. To 75°C	W	**13200**
25	Impedance ref. To 75°C	%	**6**
26	Sound Power level	dBA	**80**
27	Efficiency		
	100% Pn cos ϕ= 1	%	**98.98**
	75% Pn cos ϕ= 1	%	**99.11**
	50% Pn cos ϕ= 1	%	**99.18**
28	Total weight	Kg	**3350**
29	Dimensions: in plant (LxP)	mm	**1630x1000**
	Height (H)	mm	**2180**
	Interdistance of wheels (I)	mm	**820**

Fittings and Accessories:

-Dial electronic thermometer with two electric. n.o. contacts.

-n.3 thermal resistance tp.PT 100 with junction electrical box.

Other Accessories:

-On demend.

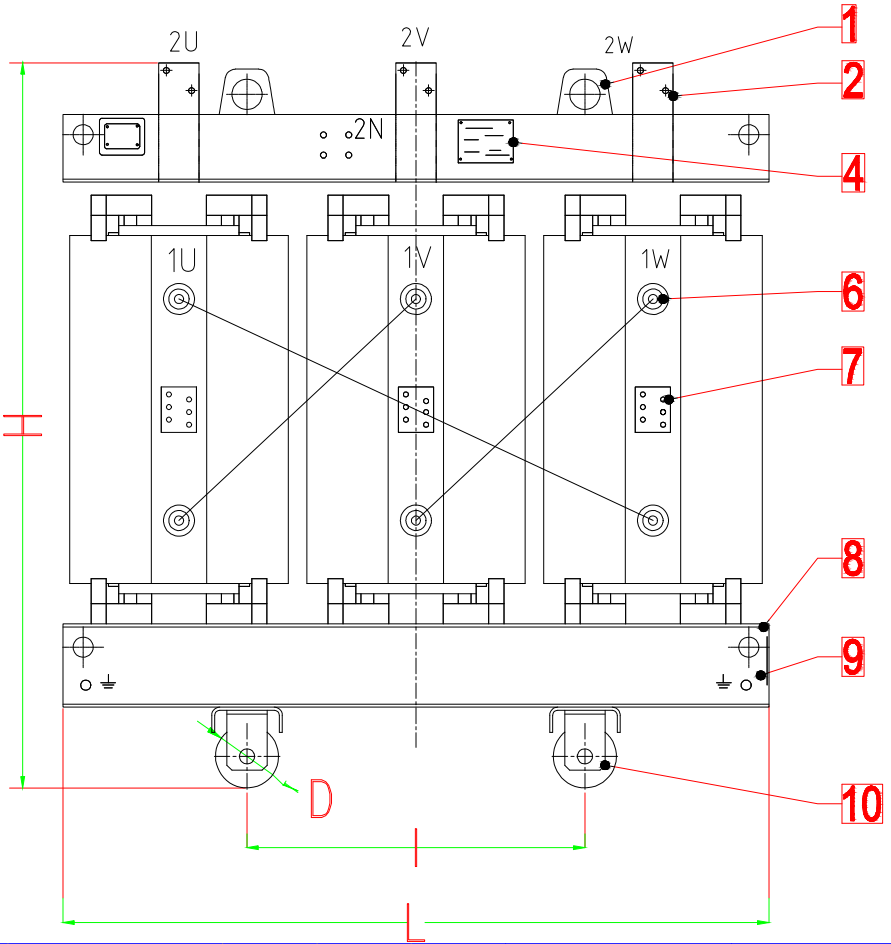

REVISIONE REVISION	DATA DATE	DESCRIZIONE DESCRIPTION	ELABORATO WORKED OUT	CONTROLLATO CHECKED	APPROVATO APPROVED
00		EMISSIONE	T. AL-SALIHI	T. AL-SALIHI	T. AL-SALIHI

EWC GROUP srl

CLIENTE CUSTOMER

TITOLO TITLE: Cast resin Dist. Transf. / Trasf. di Dist. in resina 1600 KVA – 11/0.416kV

COMMESSA JOB

FILE FILE

DISEGNO DRAWING | FOGLIO SHEET | DI

1 of 2

A TERMINI DI LEGGE CI RISERVIAMO LA PROPRIETA' DI QUESTO DISEGNO CON DIVIETO DI RIPRODURLO O DI RENDERLO COMUNQUE NOTO A TERZI O A DITTE CONCORRENTI SENZA NOSTRA AUTORIZZAZIONE.
COPING OF THIS DOCUMENT DISCLOSING IT TO THIRDS OR RIVAL FIRME OR USING THE CONTENTS THEREOF FOR ANY PURPOSE WITHOUT EXPRESS WRITTEN AUTHORISATION IS LEGALLY FORBIDDEN.

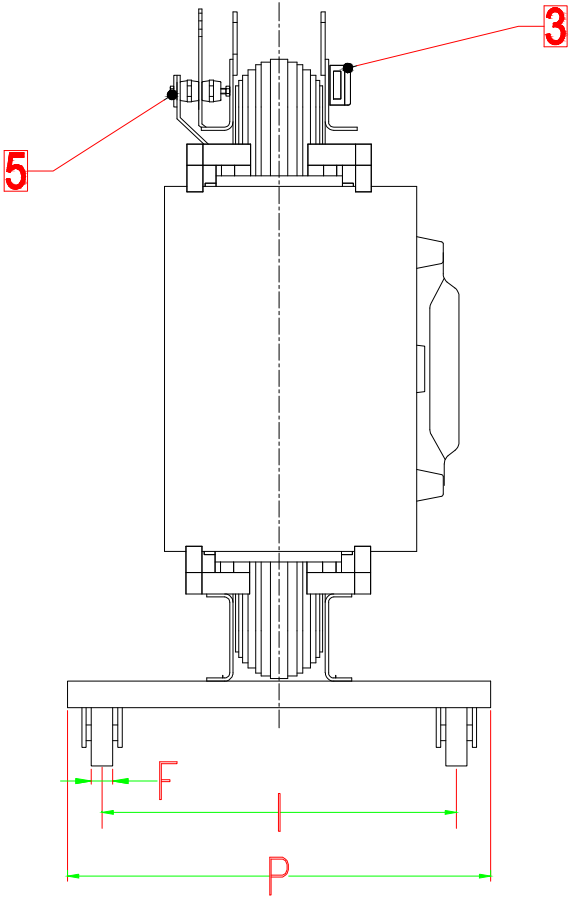

Pos. 7 – No Scala

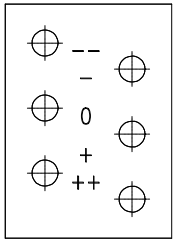

Description /Descrizione	
Raffreddamento / Cooling	AN
Potenza / Power	1600 kVA
Tensioni / Voltage	11/0.416 kV
Gruppo / Connection Sym.	Dyn11
Frequenza / Frequency	50 Hz
Peso Totale / Total weight	3350

Pos.	Descrizione / Description	N°
1	Golfari di sollevamento / Lifting lugs	4
2	Terminale B.T. / Low voltage terminal	3
3	Scatola connessioni / Connection box	1
4	Targa caratteristiche / Rating plate	1
5	Terminale neutro / Neutral terminal	1
6	Terminale primario / High voltage terminal	3
7	Morsettiera variazione I° / Variation clamp I°	3
8	Attacchi per traino / Couplers	8
9	Morsetto di messa a terra / Earthing clamp	2
10	Carrello reversibile / Trolley for shifting	2

REVISIONE REVISION	DATA DATE	DESCRIZIONE DESCRIPTION	ELABORATO WORKED OUT	CONTROLLATO CHECKED	APPROVATO APPROVED
00		EMISSIONE	T. AL-SALIHI	T. AL-SALIHI	T. AL-SALIHI

EWC GROUP srl

CLIENTE CUSTOMER

TITOLO TITLE: **Cast resin Dist. Transf. / Trasf. di Dist. in resina 1600 KVA – 11/0.416kV**

COMMESSA JOB

FILE FILE

DISEGNO DRAWING | FOGLIO SHEET | DI

2 DI 2

A TERMINI DI LEGGE CI RISERVIAMO LA PROPRIETA' DI QUESTO DISEGNO CON DIVIETO DI RIPRODURLO O DI RENDERLO COMUNQUE NOTO A TERZI O A DITTE CONCORRENTI SENZA NOSTRA AUTORIZZAZIONE.
COPING OF THIS DOCUMENT, DISCLOSING IT TO THIRDS OR RIVAL FIRME OR USING THE CONTENTS THEREOF FOR ANY PURPOSE WITHOUT EXPRESS WRITTEN AUTHORISATION IS LEGALLY FORBIDDEN.